REMOVAL

1. DISCONNECT CABLE FROM NEGATIVE BATTERY TERMINAL

2. REMOVE RADIATOR RESERVE TANK ASSEMBLY

(a) Separate the radiator reserve tank hose.

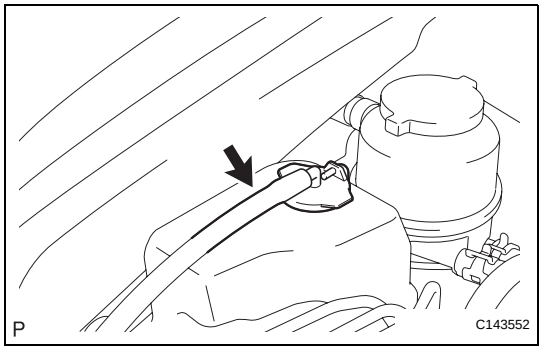

(b) Remove the radiator reserve tank assembly.

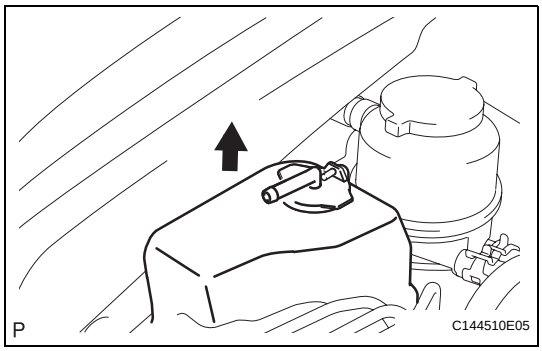

3. DRAIN BRAKE FLUID

NOTICE:
If brake fluid leaks onto any painted surface, immediately clean it off completely.

4. REMOVE BRAKE ACTUATOR WITH BRAKE ACTUATOR BRACKET ASSEMBLY

(a) Release the lock lever and disconnect the brake actuator connector.

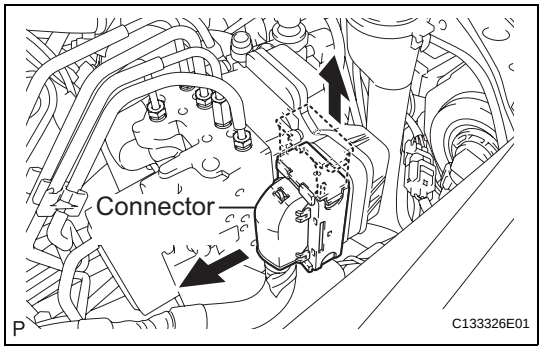

(b) Using SST, disconnect the 6 brake lines from the brake actuator with brake actuator bracket assembly.
SST 09023-00101

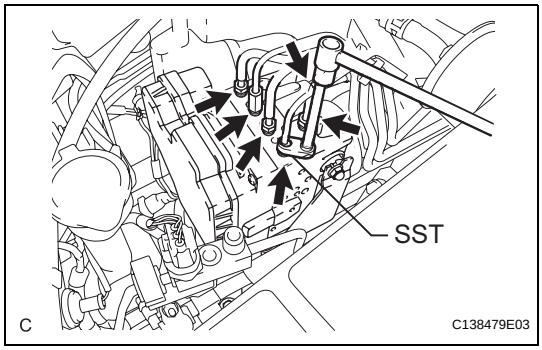

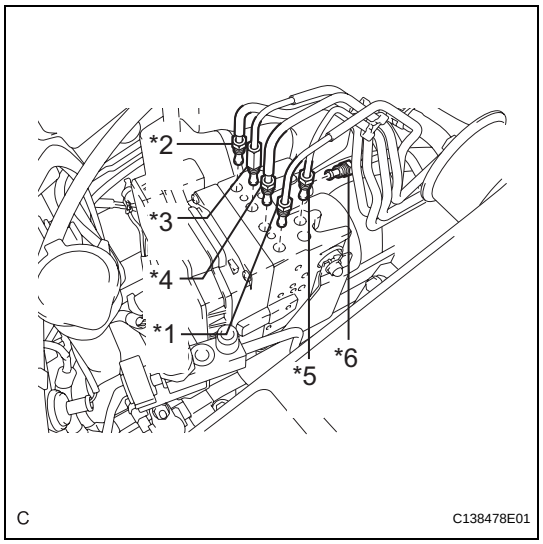

(c) Use tags or make a memo to identify the places to reconnect.
HINT:
- *1: To Front Wheel Cylinder RH
- *2: To Front Wheel Cylinder LH
- *3: To Rear Wheel Cylinder RH
- *4: To Rear Wheel Cylinder LH
- *5: From 1st Master Cylinder
- *6: From 2nd Master Cylinder

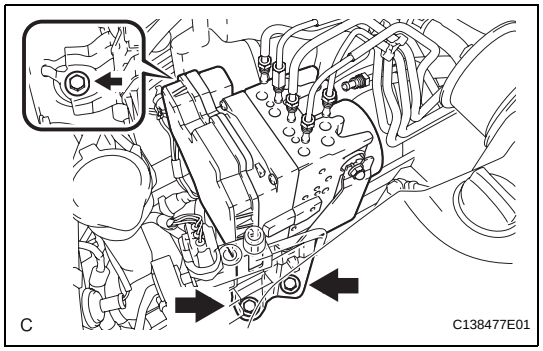

(d) Remove the 3 bolts and the brake actuator with brake actuator bracket assembly from the body.
NOTICE:
Do not damage the brake lines and wire harness.

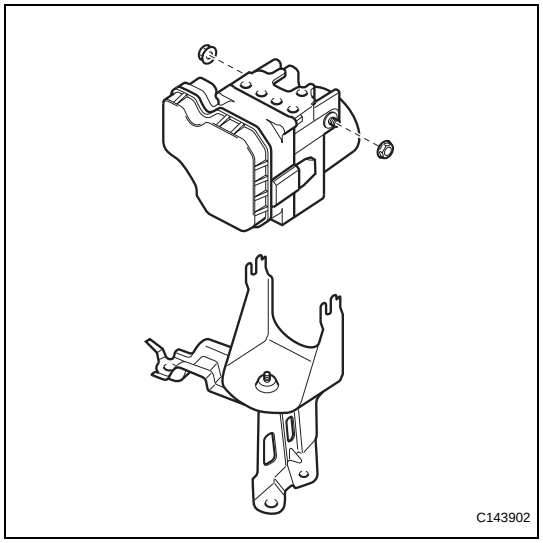

DISASSEMBLY

1. REMOVE BRAKE ACTUATOR

(a) Remove the 2 nuts and the brake actuator from the brake actuator bracket assembly.